Encore

Royale Collection

Main Frame

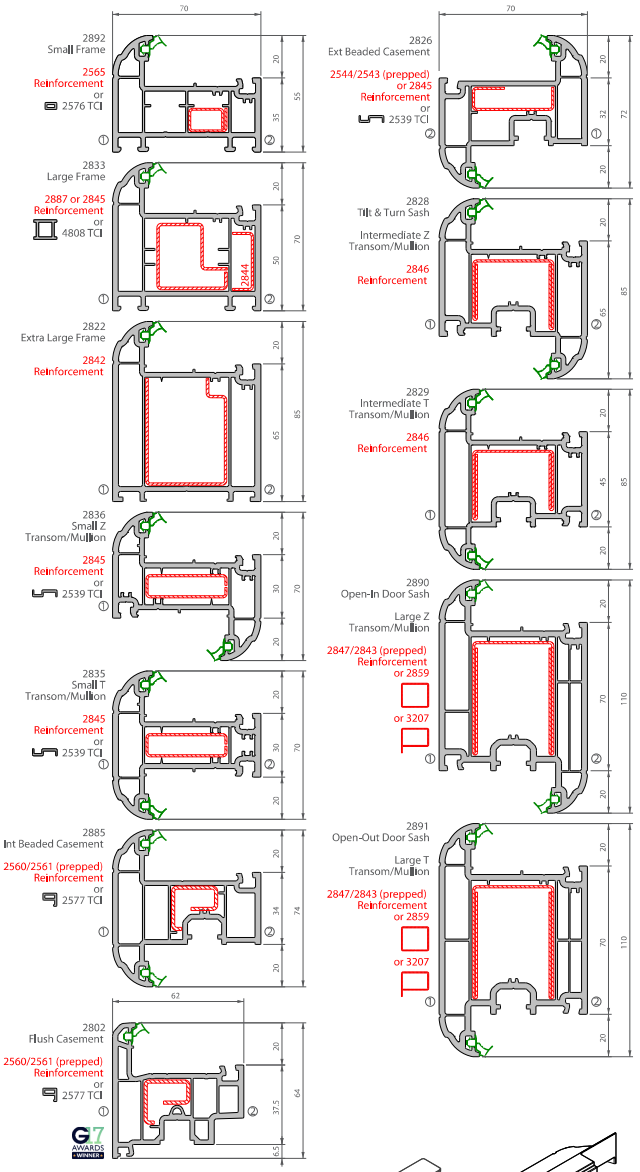

Cills , Frame Extenders, Couplers

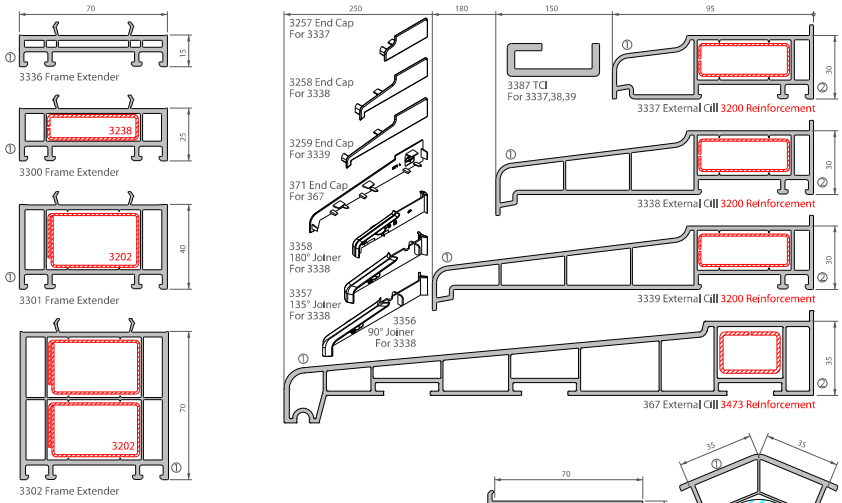

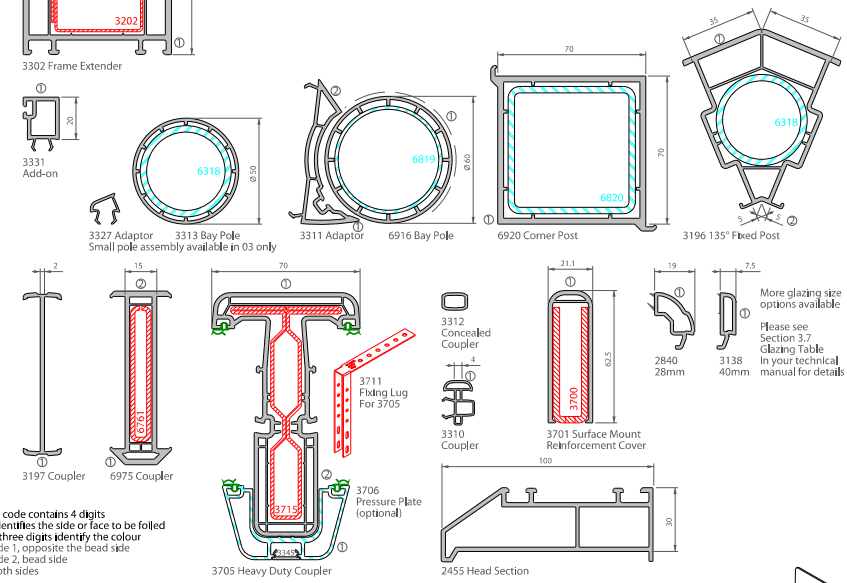

Foil Codes
Each colour code contains 4 digits
First digit identifies the side or face to be foiled
Remaining three digits identify the colour
① Foil to side 1, opposite the bead side
② Foil to side 2, bead side
③ Foil to both sides

Ancillaries

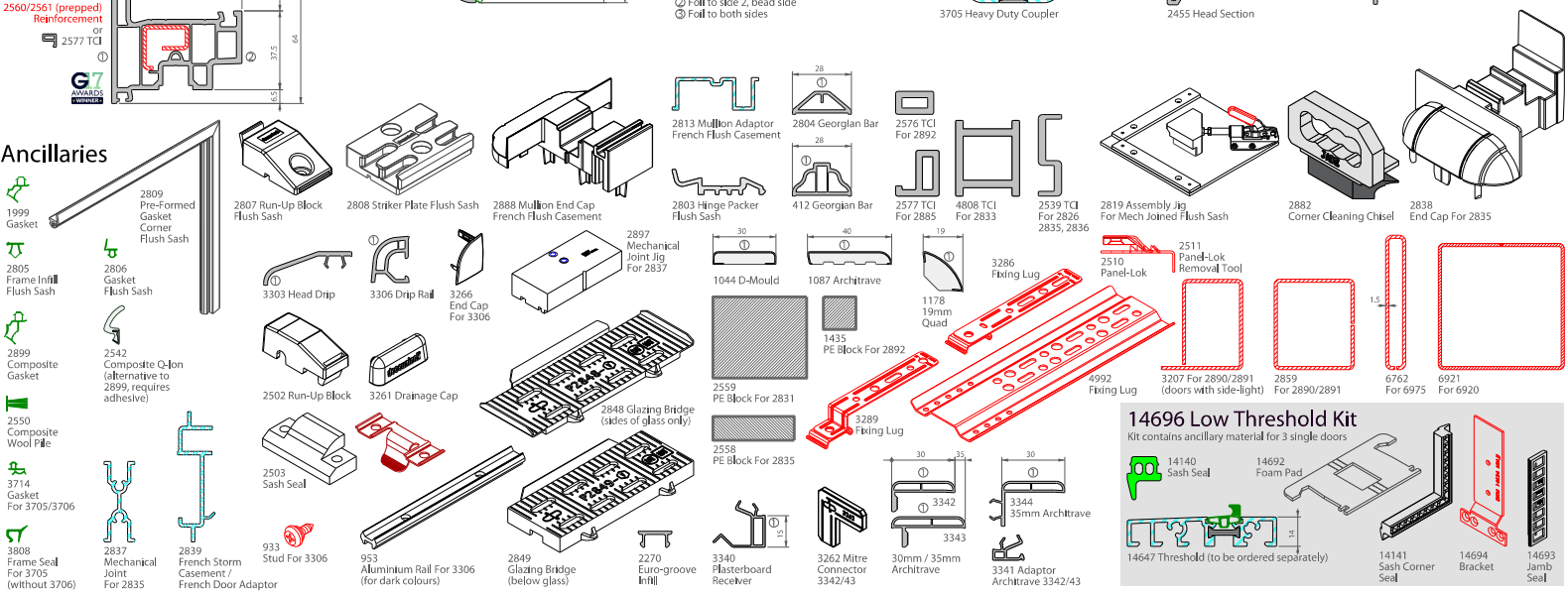

14696 Low Threshold Kit

Kit contains ancillary material for 3 single doors

Flush Sash Mechanical Joint Kit

2812 kit for 10 sashes
Kit contents:
2810 x 20 pairs
2811 x 20 pcs
2815 x 160
2816 x 80

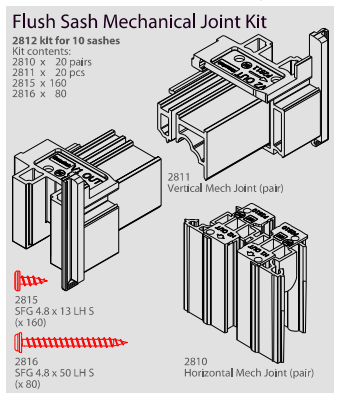

Open-Out Low Threshold

Stormguard AM5EX-70

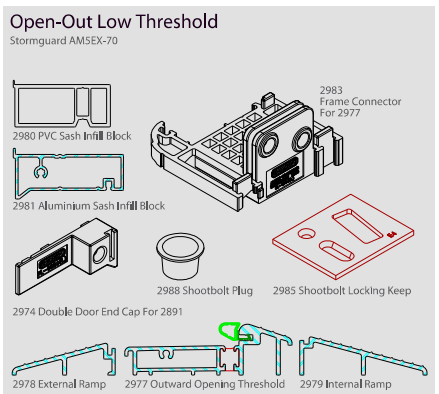

Open-In Low Threshold

Stormguard AM3-70

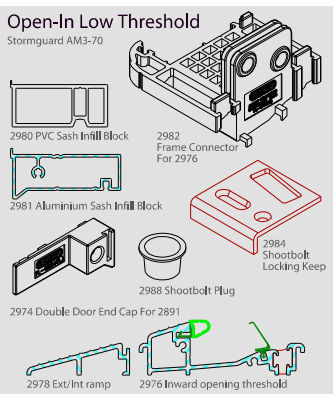
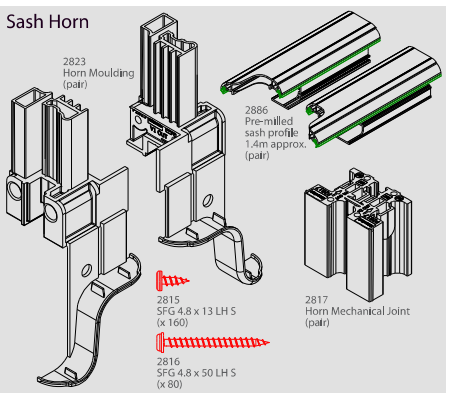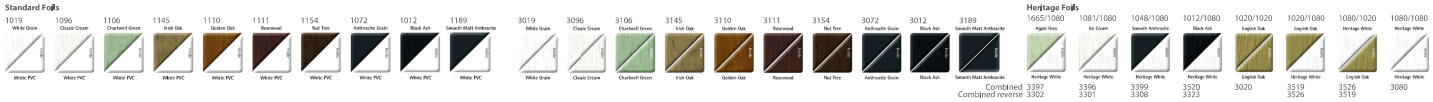
Sash Horn